HC160-85RFS

Part No.	Code
1.	1.0-ISO
2.	BSBODY-MINI-O/F
3.	BSWFERRULE-41
4.	FLEX25-229-BL
5.	NUT-1.00
6.	O/F-GRID-6MMCP
7.	O/F-RECT-6MM
8.	O/F-RECT-SEAL
9.	P-CPIN-40MM
10.	P-F-MINIGRATING
11.	P-RW-MBW-SEAL
12.	P-STEMBALL-CP
13.	P-VSEAL-MINI
14.	SEALCARRIERSS

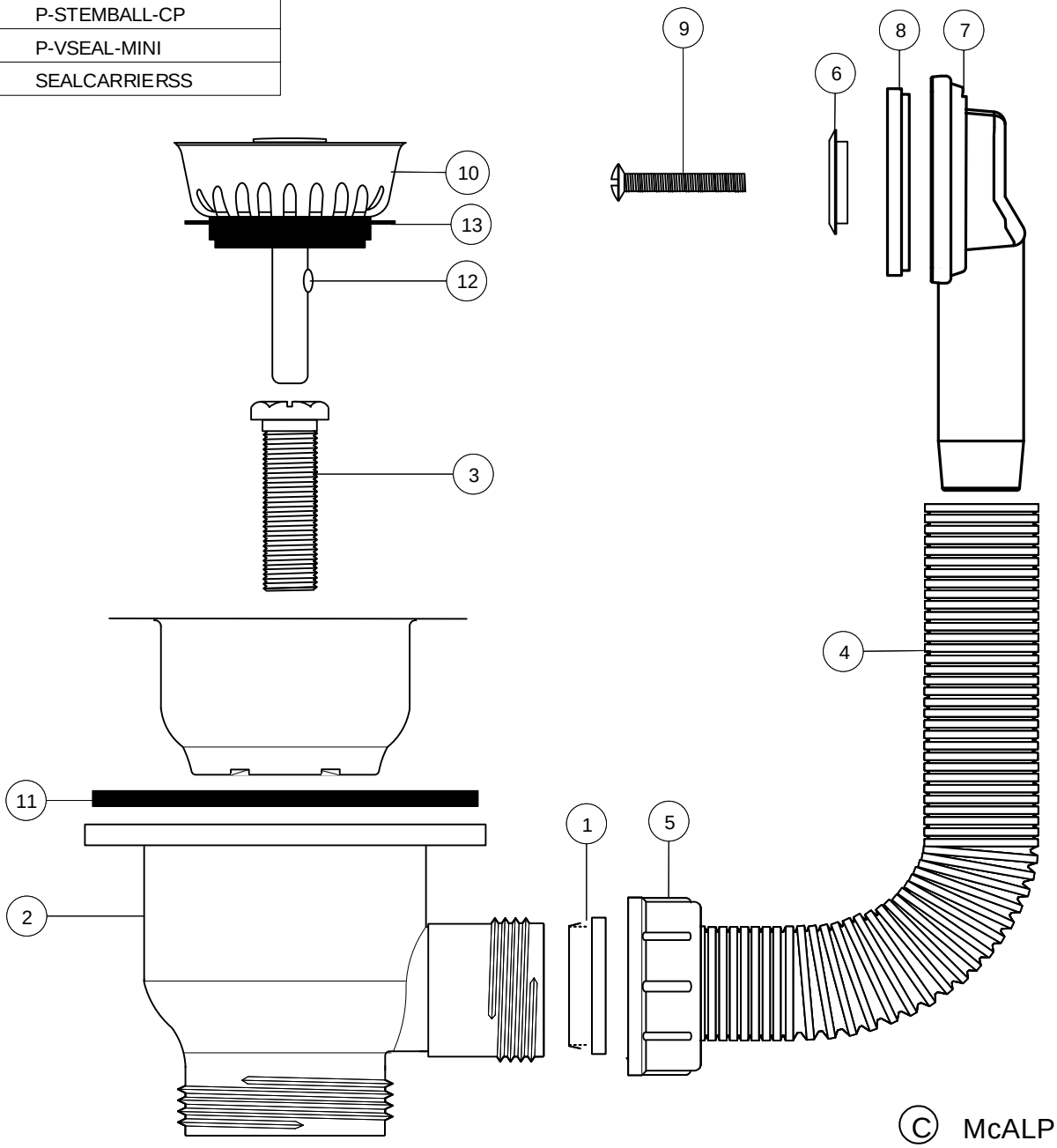

© McALPINE
14/12/2010